PCTS

INTELLIGENT SPACES

DYNAMIC MANAGEMENT OF SPACE

INDEX

PCTS HEADQUARTERS, PORTUGAL | **ALMA & AQUA MIX**

ABOUT US 4

PRODUCT DETAILS 6

ALMA PANELS 12

AQUA PANELS 24

ALMA & AQUA MIX 36

FULL AUTO 42

WAVE PANELS 50

VISTA PANELS 64

TECHNICAL DATA TABLE 74

PCTS HEADQUARTERS, PORTUGAL | **ALMA & AQUA MIX**

ABOUT US

SELECTCHEMIE AG, SWITZERLAND | **AQUA**

PCTS is a company formed by engineers and has precision in its DNA. Whilst most of our competitors originate from the construction industry and have designed and manufactured their products to these standards we believe that our exacting precision led standards ensure products are superior in their design and development.

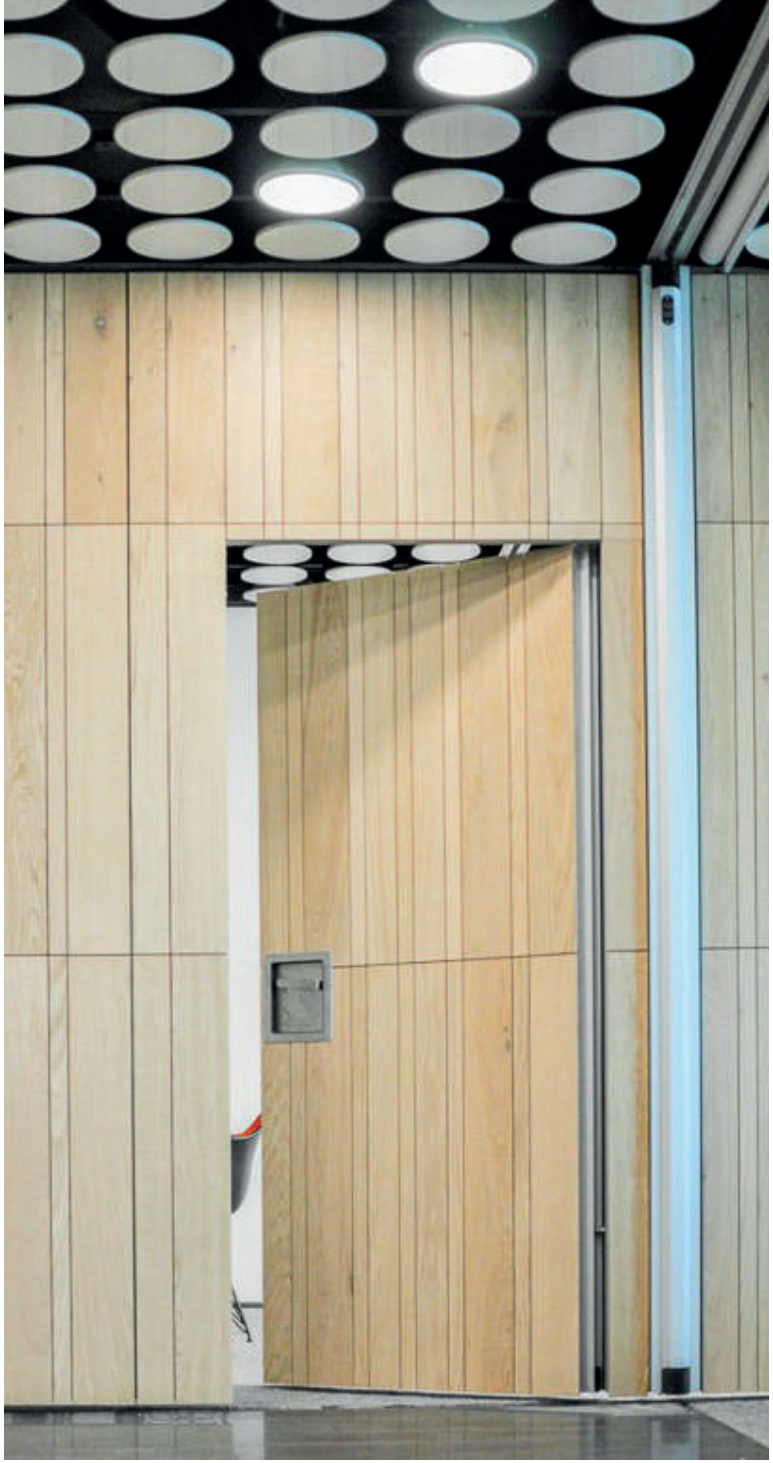

URALCHEM , RUSSIA | **ALMA**

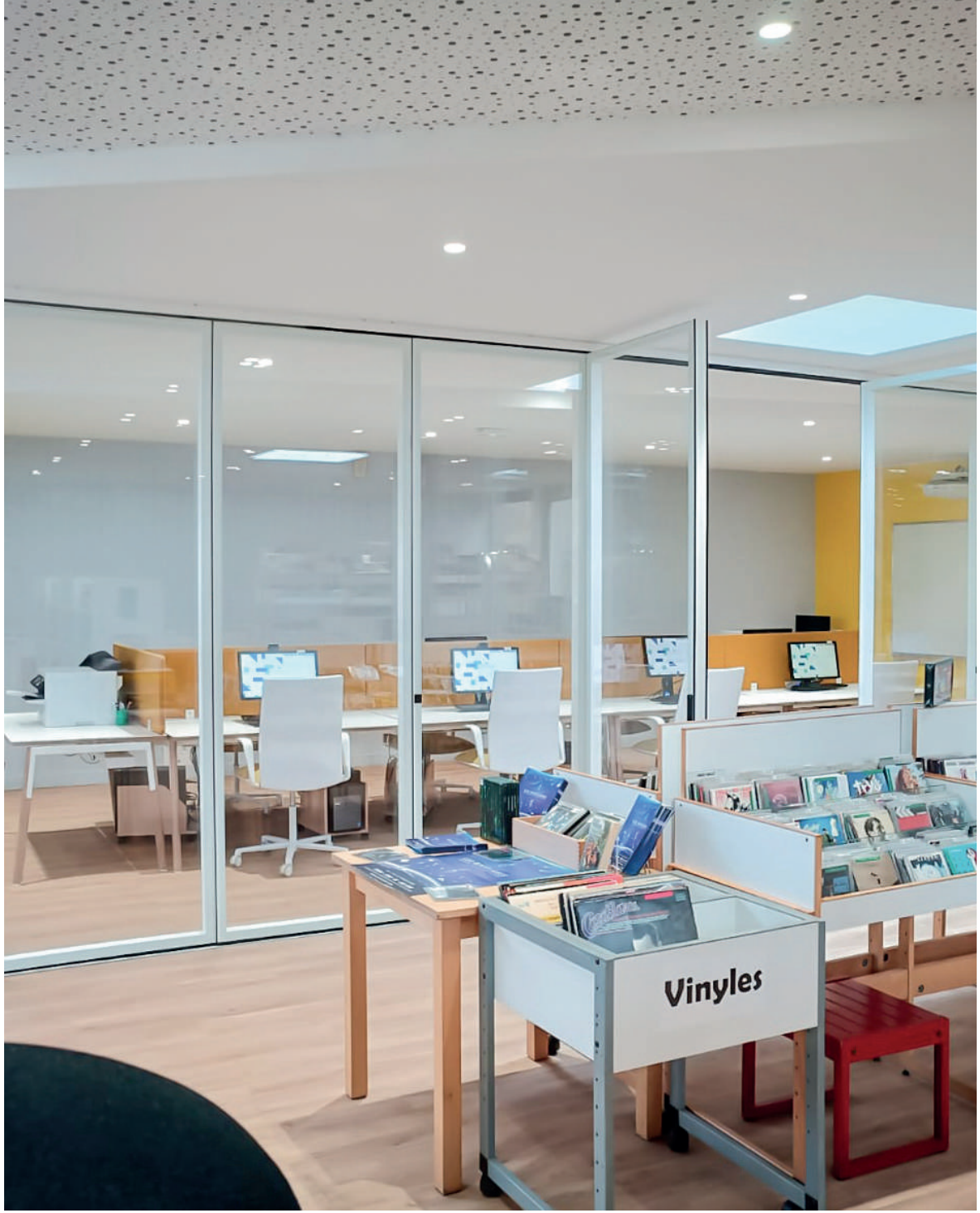

BIBLIOTHÈQUE, FRANCE | **WAVE**

> “WE CONTINUALLY IMPROVE OUR PROCESSES TO ENSURE PRODUCTS ARE SUPERIOR IN THEIR DESIGN AND DEVELOPMENT”

PCTS HEADQUARTERS, PORTUGAL | **VISTA**

PRODUCT DETAILS

SYSTEMS

ALMA & AQUA & WAVE

FULL AUTOMATIC

Our fully automatic i-Core system allows the user to position the wall automatically then lock and seal the panels quickly and safely by way of an electronic key-switch. Each panel is driven electrically along the track and contains a wireless two-way control unit which the master control is able to identify & communicate with. This allows the user to program such things as speed of closure and configuration as well as protecting the system in the event of power interruption. Battery back-up is supplied as standard.

ALMA & AQUA

SEMI-AUTOMATIC

Our semi-automatic E-Lock system allows the user to fully lock the panels quickly and safely after positioning by way of an electronic key-switch. This allows the wall to automatically seal at the top and bottom to lock it from movement and to insulate it acoustically. The system runs by way of a quick-action worm screw driven by a 24v actuator powered by a protected power supply (certified fully for safety) battery back-up can be supplied for use in case of a cut in mains electricity.

ALMA & WAVE & VISTA

MANUAL

Our Quick-Lock system allows the user to lock the panels quickly and safely after positioning. A simple half-turn of the handle seals the wall at the top and bottom to lock it from movement and to insulate it acoustically.

DOOR HANDLE

ALMA & AQUA

WAVE

VISTA

VISTA

WE DESIGN THE HANDLE THAT YOU NEED!

CONTROL DETAILS

Low voltage electrical contacts are housed in our aluminium profiles, it guarantees ease of operation and safe electrical flow between the panels. Automatic seals are electronically activated and panels slide easily through a 2-point trolley system on an anodized aluminium track.

HINGE SYSTEM

The hinge system offers superior engineering and quality. Our innovative enclosed hinge allows full adjustment of the door in three dimensions. Thus, when the doors or/and the panels are closed, there is no element that contradicts the continuity of the wall.

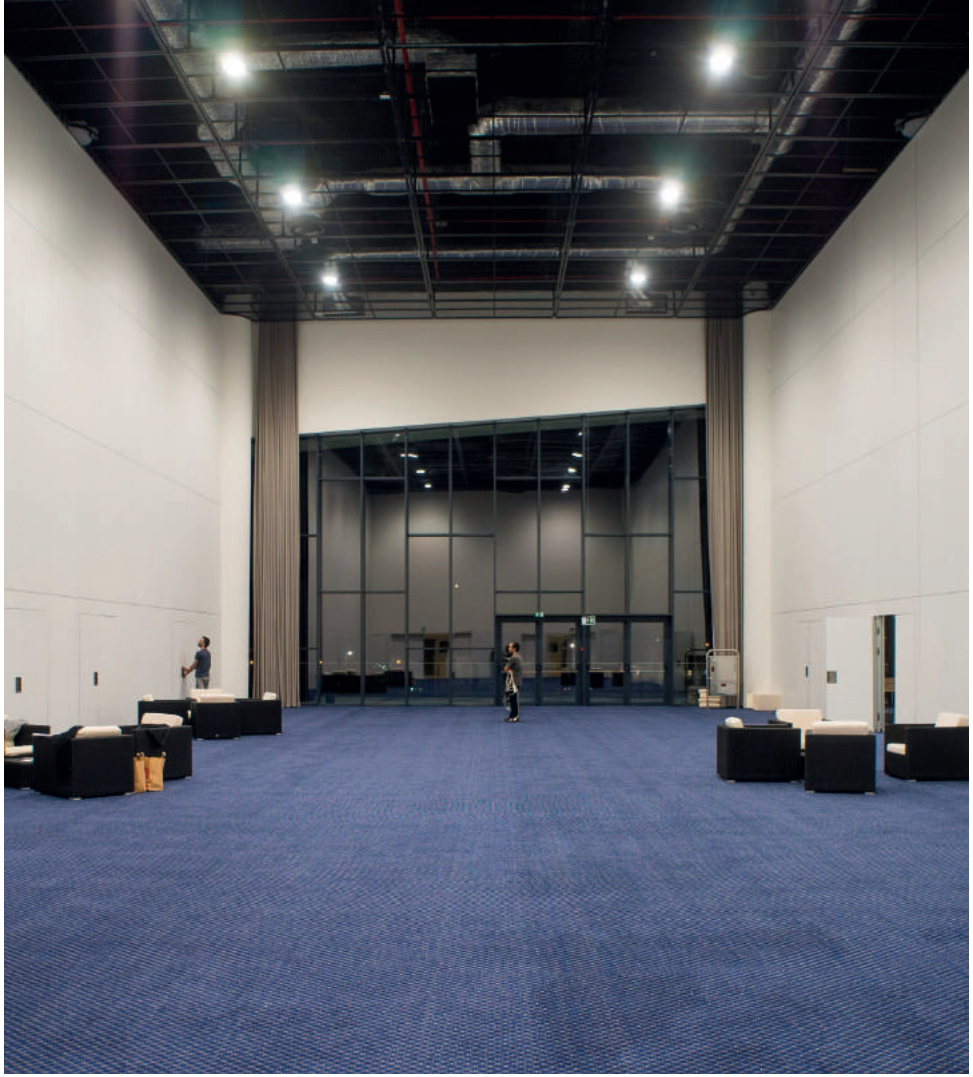

MDH & BDH

Track systems specially designed for projects with heights and panels above our standard measures and weights.

ALMA
MAX. HEIGHT
11 METRES

AQUA
MAX. HEIGHT
4.5 METRES

ELECTRICALLY CONTROLLED BLINDS

It's one thing to enjoy the benefits of blinds to block light and give you privacy. With electric blinds, you can easily control then through the touchpad or your smartphone, and also program them to open and close at certain times, connect to light sensors, movement sensors, etc.

SWITCHABLE GLASS

A smart glass or switchable glass uses electro-chromatic technology to interchange between transparency and an opaque state by applying voltage. It can be controlled through the touch pad, or a smart phone, and also programmed to switch on or off during certain times, connected to light sensors, movement sensors, etc.

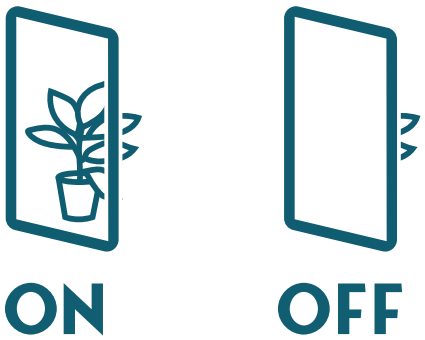

OUR BOXES MAINTAIN THE INTEGRITY OF THE PRODUCTS

PACKAGING

PALLET

Recommended for panels European land shipment.

WOOD CRATE

Recommended for panels sea and air International shipments.

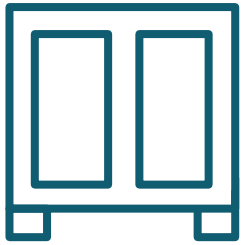

CLOSED WOOD CRATE

Recommended for panels sea and air International shipments.

PALLET & CARD BOX

Track shipment.

ALMA

SOUND INSULATION

FIRE RATING: EI2.30

AUTOMATIC

PRIVATE

SEVERAL FINISHES

STANDARD PANEL
TELESCOPIC
SINGLE INSET PASSDOOR
DOUBLE INSET PASSDOOR
FULL-HEIGHT PASSDOOR
SEGMENTED CURVED

CHARCO HOTEL, URUGUAY - ALMA

MICROSOFT, PORTUGAL - ALMA

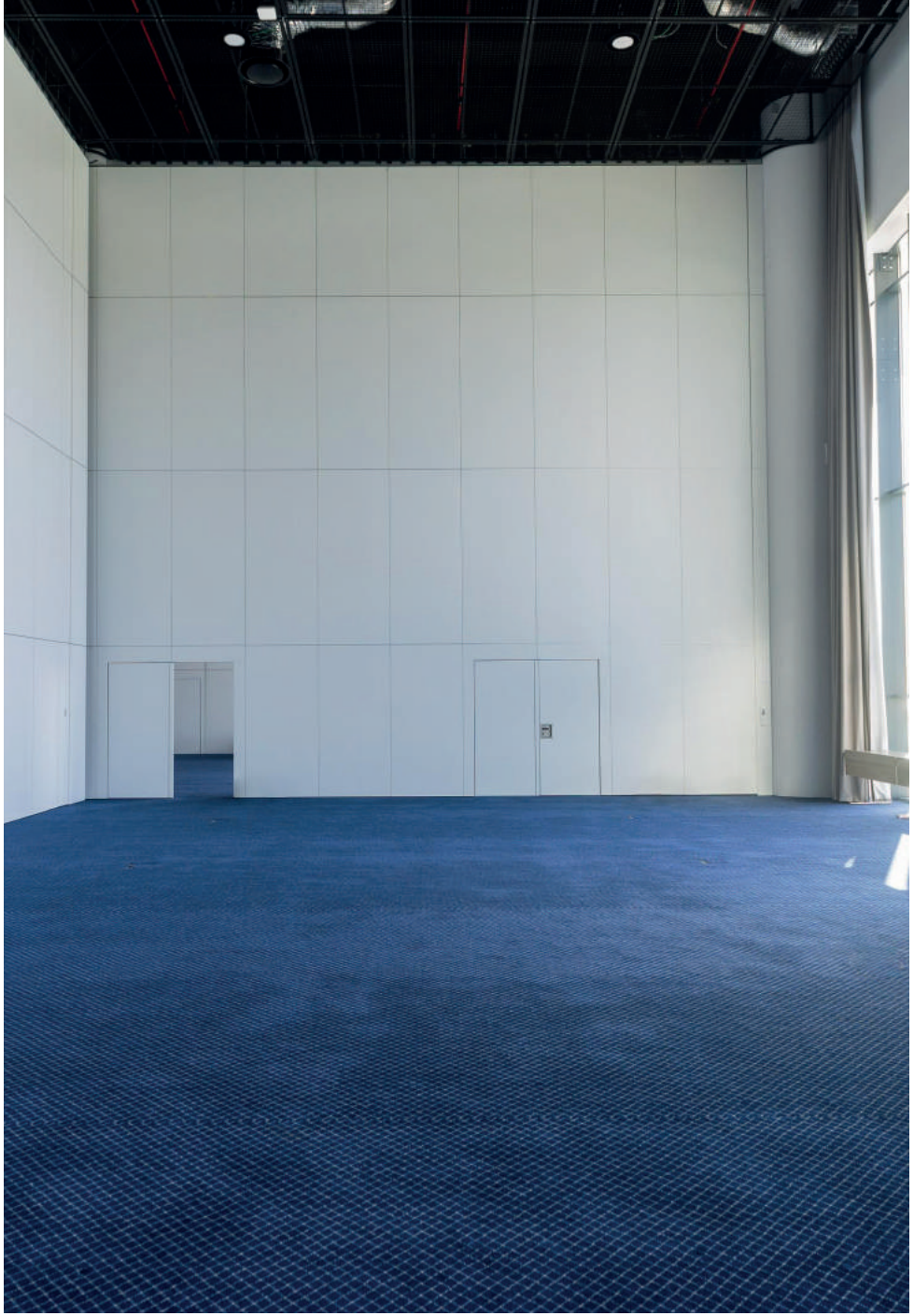

TIVOLI, PORTUGAL - ALMA

ARIANE, FRANCE - ALMA

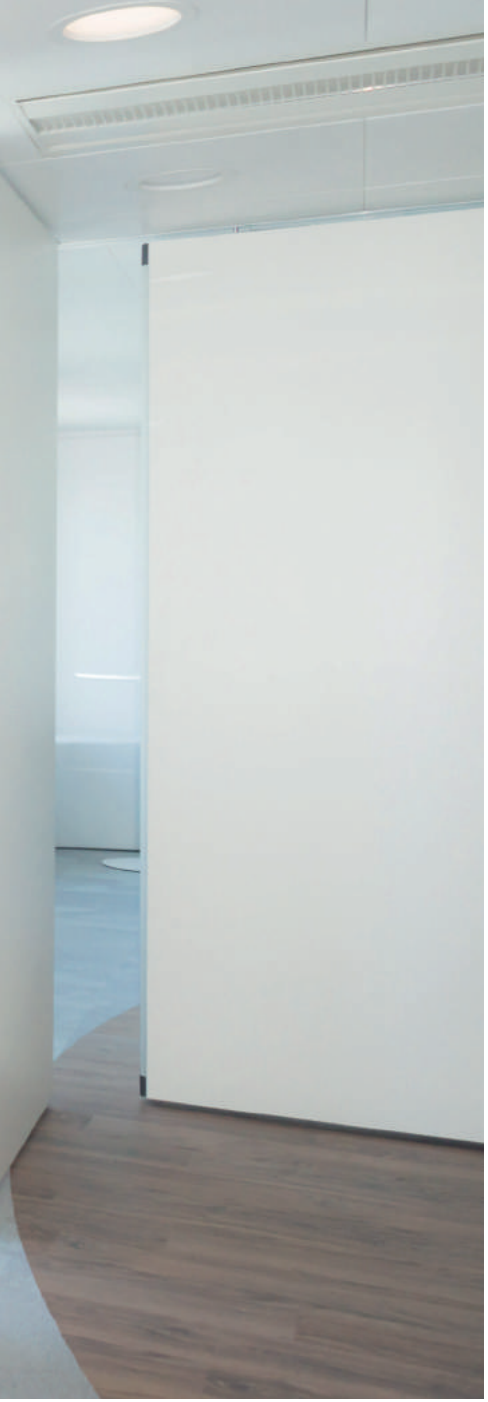

MICROSOFT, USA - ALMA

BPI, PORTUGAL - ALMA

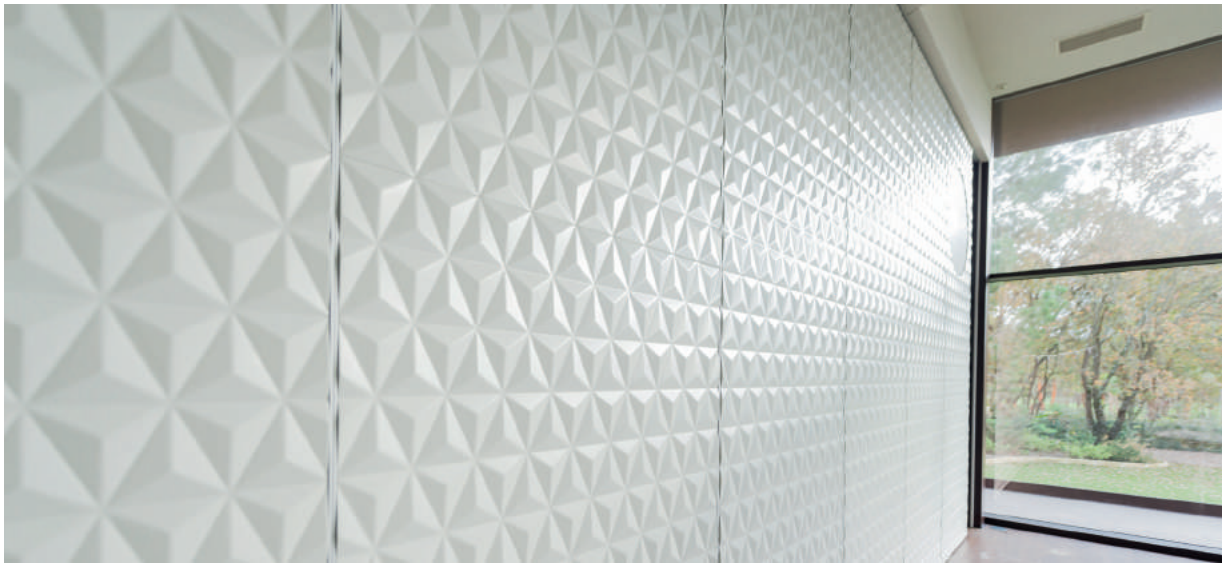

QUINTA DOS LAGOS, PORTUGAL - ALMA

HOTEL SARAY, SPAIN - ALMA

URALCHEM, RUSSIA - ALMA

STACKING SYSTEMS

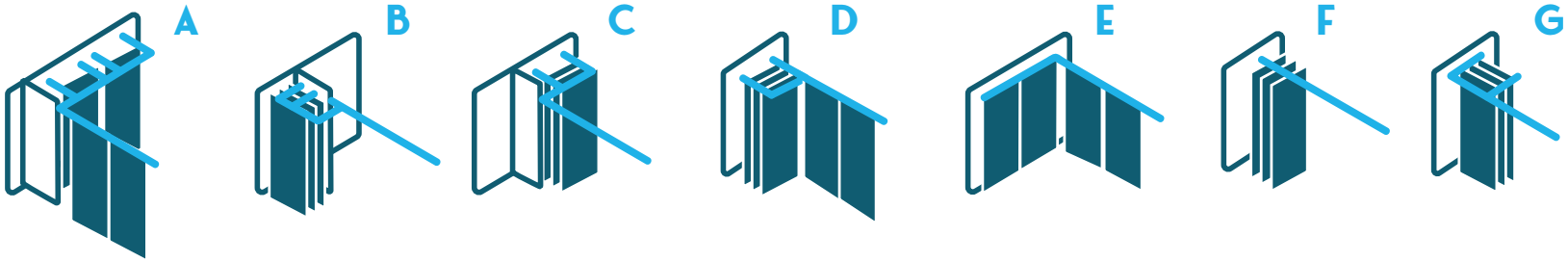

PANEL'S TYPE

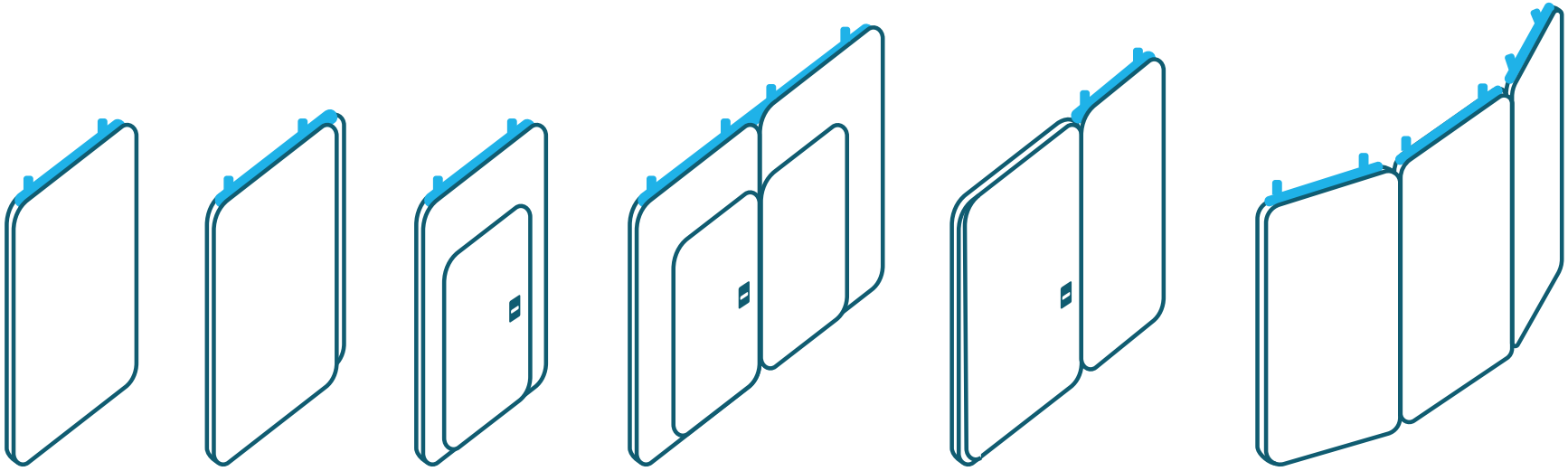

STANDARD PANEL

TELESCOPIC

SINGLE INSET PASSDOOR

DOUBLE INSET PASSDOOR

FULL-HEIGHT PASSDOOR

SEGMENTED CURVED

SUSPENSIONS

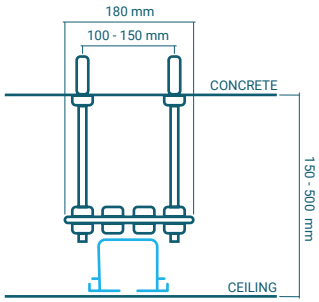

CONCRETE

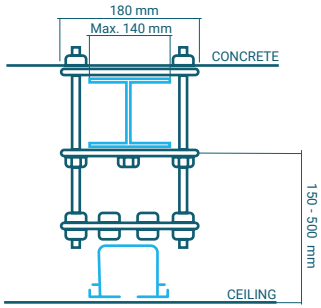

STEEL BEAM WITH 3 PLATES

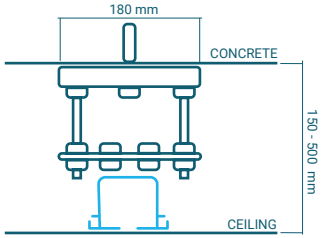

BENT PLATE

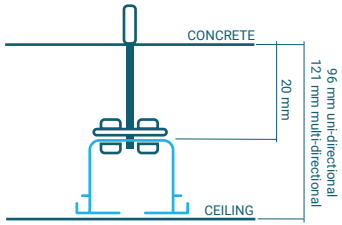

DIRECT

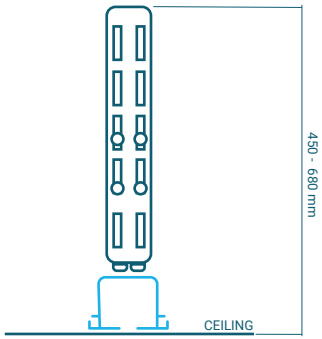

LONGITUDINAL

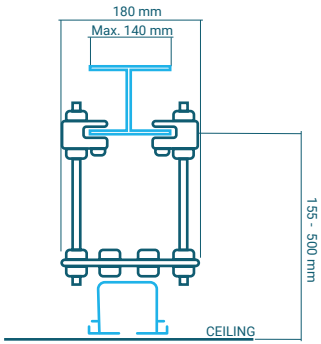

STEEL BEAM WITH CLAMPS

CEILING TRACK

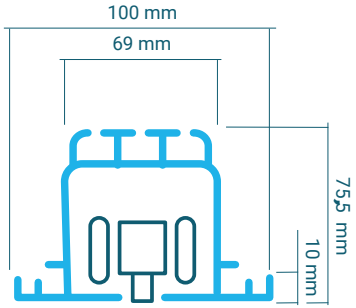

TRACK TYPE UD

Uni–Directional

Aluminium track profiles extruded from architectural grade 6063-T6 alloy.
Load bearing capacity: 358Kg per panel.

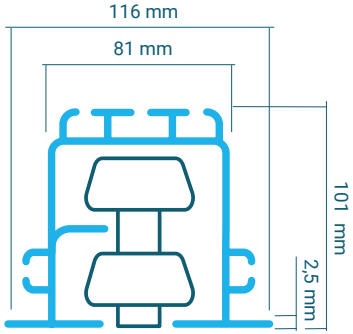

TRACK TYPE MDS

Standard
Multi–Directional

Aluminium track profiles extruded from architectural grade 6063-T6 alloy.
Load bearing capacity: 453Kg per panel.

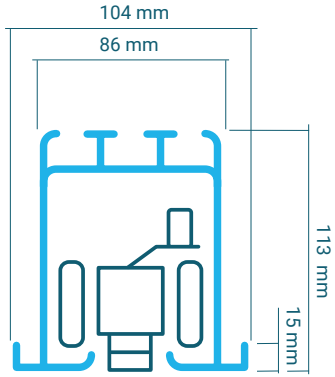

TRACK TYPE MDH

Heavy Duty
Multi–Directional

Aluminium track profiles extruded from architectural grade 6063-T6 alloy.
Load bearing capacity: 850Kg per panel.

FINISHES

W908 ST2	W980 ST2	U708 ST9	U999 ST2		
U114 ST9	U156 ST9	U775 ST9	U763 ST9	H1733 ST9	
U525 ST9	U630 ST9	U332 ST9	U323 ST9	U702 ST9	U788 ST9
U732 ST9	U960 ST9	H1424 ST22	H3860 ST9	H3430 ST22	H1312 ST10
H1145 ST10	H3170 ST12	H3331 ST10	H3157 ST12	H1582 ST15	H1334 ST9
H3395 ST12	H3303 ST10	H3700 ST10	H3734 ST9	H3192 ST19	WRITABLE WHITE BRIGHT

Note: Material avaliable for immediate delivery from the supplier. Stock PCTS White MFC.

TECHNICAL DATA TABLE

		STANDARD PANEL			FIXED TELESCOPIC JAMB			TELESCOPIC			SINGLE INSET PASSDOOR			DOUBLE INSET PASSDOOR			FULL-HEIGHT PASSDOOR		
Dimensions	Thickness in mm	116	122	134	116	122	134	116	122	134	116	122	134	116	122	134	116	122	134
	Width in mm	800 - 1300			> 200			800 - 1300			1200 / 1250 / 1300			2302			1050		
	Height in mm (Max.)	11000			11000			11000			11000			11000			11000		
Construction	Aluminium Profiles																		
	Positive & Negative Aluminium Profiles	●			●			●			●			●			●		
Operation	Manual	●			●			●			●			●			●		
	Semi Automatic	●			●			●			●			●			●		
	Full Automatic	●			●			●			●			●			●		
Floor Track																			
Technical Features	Soundproofing to ISO 10140-2:2010	Rw (dB)	Density (kg/m2)		Rw (dB)	Density (kg/m2)		Rw (dB)	Density (kg/m2)		Rw (dB)	Density (kg/m2)		Rw (dB)	Density (kg/m2)		Rw (dB)	Density (kg/m2)	
		42	39		42	39		42	39		42	39		42	39		42	39	
		45	40		45	40		45	40		45	40		45	40		45	40	
		47	45		47	45		47	45		46	45		47	45		47	45	
		50	50		50	50		50	50					50	50		50	50	
		54	55		54	55		54	55					54	55		54	55	
		57	58		57	58		57	58					57	58		57	58	
Door Handles	Enclosed Handle										●			●			●		
	Pull Handle																		
	Extra Handle										●			●			●		
Finishes	Lacquering	●			●			●			●			●			●		
	HPL	●			●			●			●			●			●		
	MFC	●			●			●			●			●			●		
	MDF	●			●			●			●			●			●		
	Glass																		
	Special Finishes	●			●			●			●			●			●		
Electrically Controlled Blinds																			
Switchable Glass																			
Frosted Glass																			

AQUA

SOUND INSULATION

FIRE RATING: EI2.30

AUTOMATIC

SEVERAL FINISHES

GLASS

GLAZED PANEL
TELESCOPIC
SINGLE INSET PASSDOOR
DOUBLE INSET PASSDOOR
FULL-HEIGHT PASSDOOR
SEGMENTED CURVED

ORACLE, SPAIN - AQUA

CARTIER, FRANCE - AQUA

AKIN GUMP, UNITED ARAB EMIRATES - AQUA

UCB, SWITZERLAND - AQUA

ACCENTURE, PORTUGAL - AQUA

UNIVERSITY OF BIRMINGHAM, UNITED KINGDOM - AQUA

ALSHAYA ENTERPRISES, UNITED ARAB EMIRATES - AQUA

STRAUSS HAUR & FELD LLP, UNITED ARAB EMIRATES - AQUA

STACKING SYSTEMS

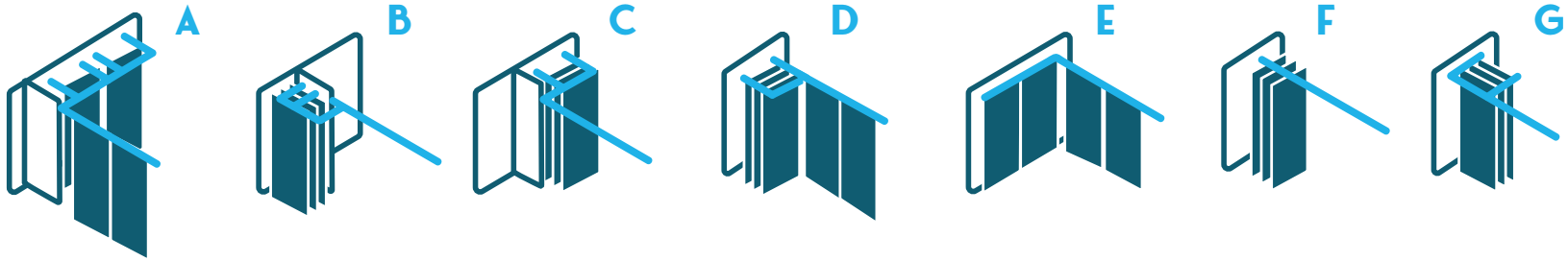

PANEL'S TYPE

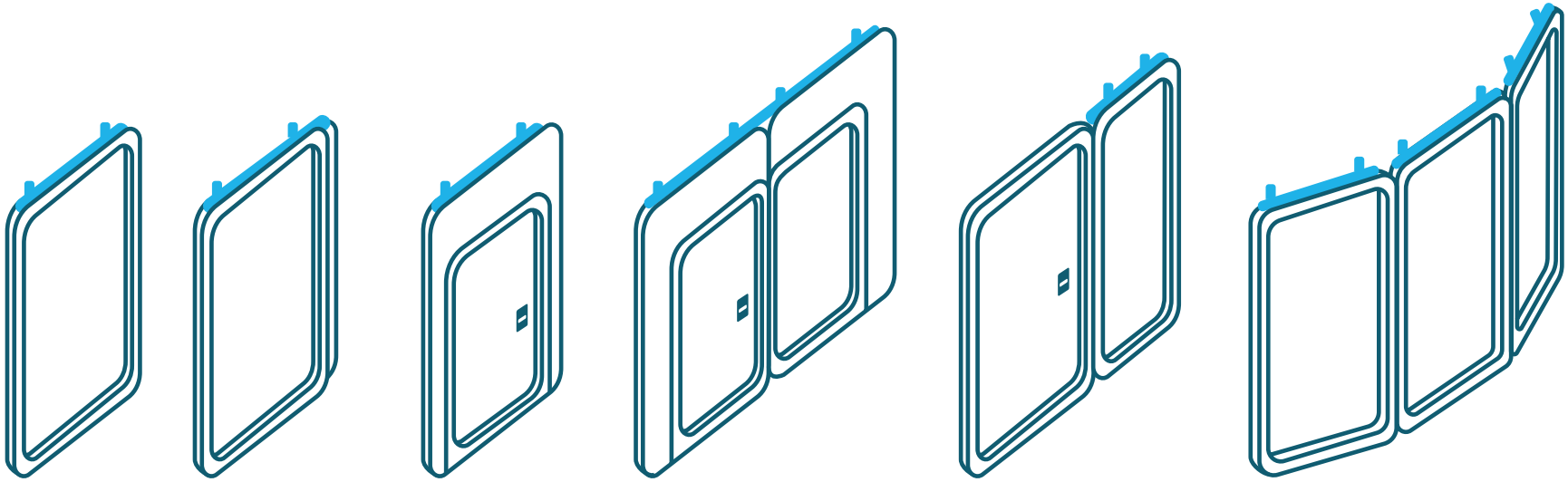

STANDARD PANEL

TELESCOPIC

SINGLE INSET PASSDOOR

DOUBLE INSET PASSDOOR

FULL-HEIGHT PASSDOOR

SEGMENTED CURVED

SUSPENSIONS

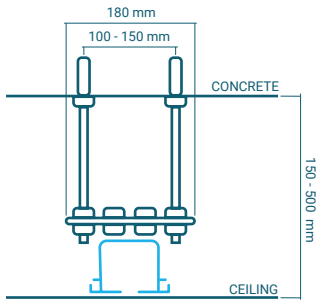

CONCRETE

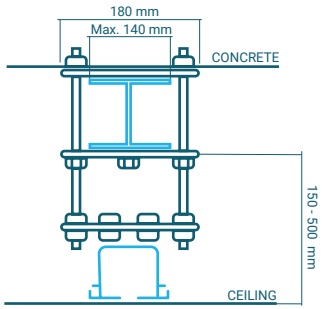

STEEL BEAM WITH 3 PLATES

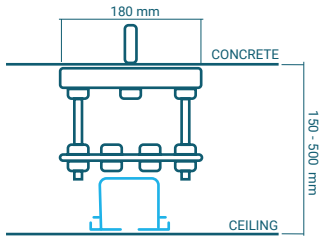

BENT PLATE

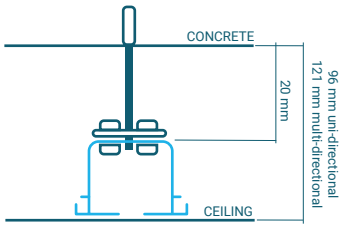

DIRECT

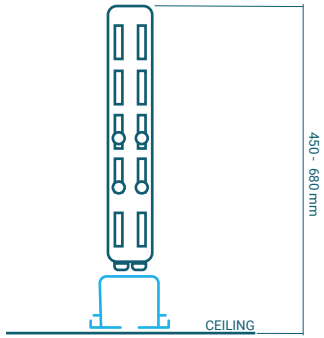

LONGITUDINAL

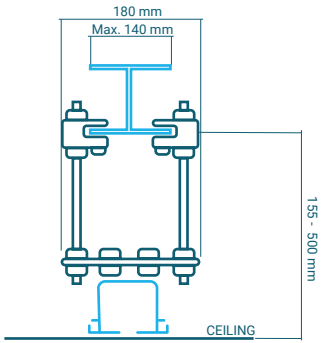

STEEL BEAM WITH CLAMPS

CEILING TRACK

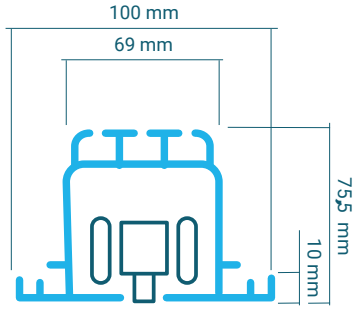

TRACK TYPE UD

Uni–Directional

Aluminium track profiles extruded from architectural grade 6063-T6 alloy.
Load bearing capacity: 358Kg per panel.

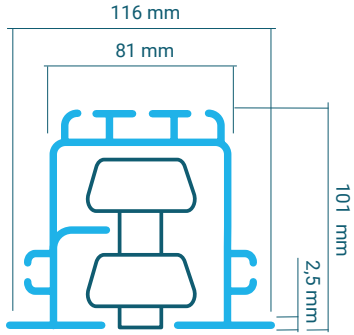

TRACK TYPE MDS

Standard
Multi–Directional

Aluminium track profiles extruded from architectural grade 6063-T6 alloy.
Load bearing capacity: 453Kg per panel.

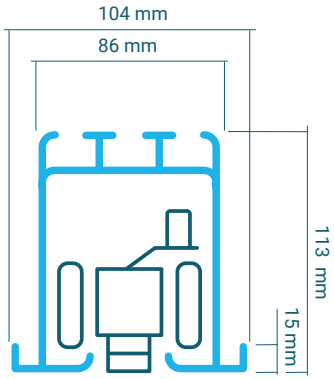

TRACK TYPE MDH

Heavy Duty
Multi–Directional

Aluminium track profiles extruded from architectural grade 6063-T6 alloy.
Load bearing capacity: 850Kg per panel.

FINISHES

Glass

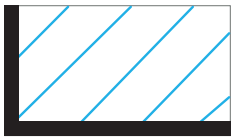

JET BLACK - RAL 9005
(standard)

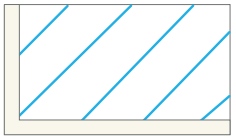

PURE WHITE - RAL 9010

Note: Other panel finishes and, profiles and glass painting upon request.

GDMO, UNITED ARAB EMIRATES - AQUA

TECHNICAL DATA TABLE

		GLAZED PANEL		TELESCOPIC		MIX		SINGLE INSET PASSDOOR		DOUBLE INSET PASSDOOR		FULL-HEIGHT PASSDOOR	
Dimensions	Thickness in mm	115	119	115	119	115	119	115	119	115	119	115	119
	Width in mm	800 - 1300		800 - 1300		800 - 1300		1200 / 1250 / 1300		2302		1050	
	Height in mm (Max.)	4500 *		4500 *		6000 *		4500		4500		3300	
Construction	Aluminium Profiles												
	Positive & Negative Aluminium Profiles	●		●		●		●		●		●	
Operation	Manual												
	Semi Automatic	●		●		●		●		●		●	
	Full Automatic	●		●		●		●		●		●	
Floor Track													
Technical Features	Soundproofing to ISO 10140-2:2010	Rw (dB)	Density (kg/m2)	Rw (dB)	Density (kg/m2)	Rw (dB)	Density (kg/m2)	Rw (dB)	Density (kg/m2)	Rw (dB)	Density (kg/m2)	Rw (dB)	Density (kg/m2)
		44	39	44	39	44	39	44	39	44	39	44	39
		49	48	49	48	49	48	49	48	49	48	49	48
Door Handles	Enclosed Handle							●		●		●	
	Pull Handle												
	Extra Handle							●		●		●	
Finishes	Lacquering	●		●		●		●		●		●	
	HPL												
	MFC												
	MDF												
	Glass	●		●		●		●		●		●	
	Special Finishes	●		●		●		●		●		●	
Electrically Controlled Blinds		●		●		●		●		●		●	
Switchable Glass		●		●		●		●		●		●	
Frosted Glass		●		●		●		●		●		●	

*For heights above 3300mm, panels have to be segmented.

ALMA & AQUA MIX

SOUND INSULATION

FIRE RATING: EI2.30

AUTOMATIC

SEVERAL FINISHES

GLASS

PRIVATE

PAQUEBOT, SWITZERLAND - ALMA & AQUA MIX

PCTS HEADQUARTERS, PORTUGAL - ALMA & AQUA MIX

PCTS HEADQUARTERS, PORTUGAL - ALMA & AQUA MIX

MAKE YOUR OWN MIX

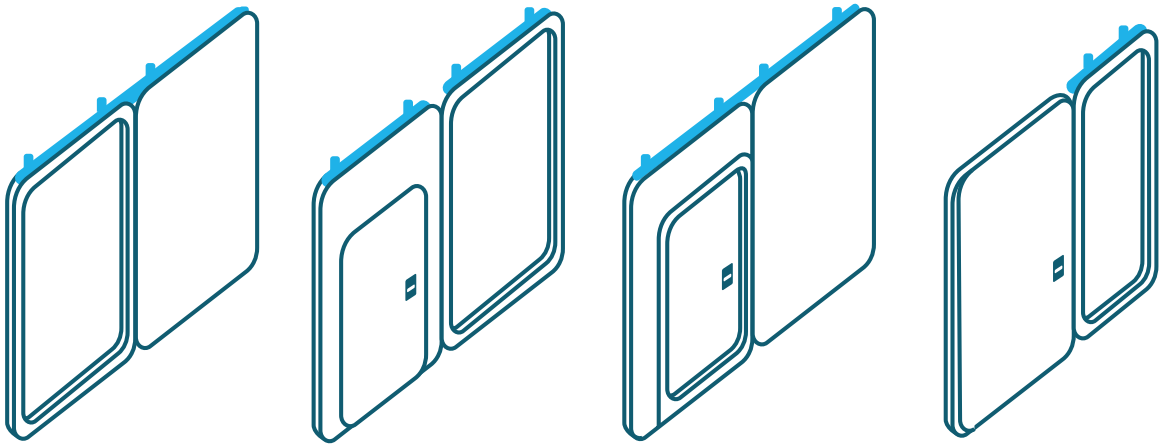

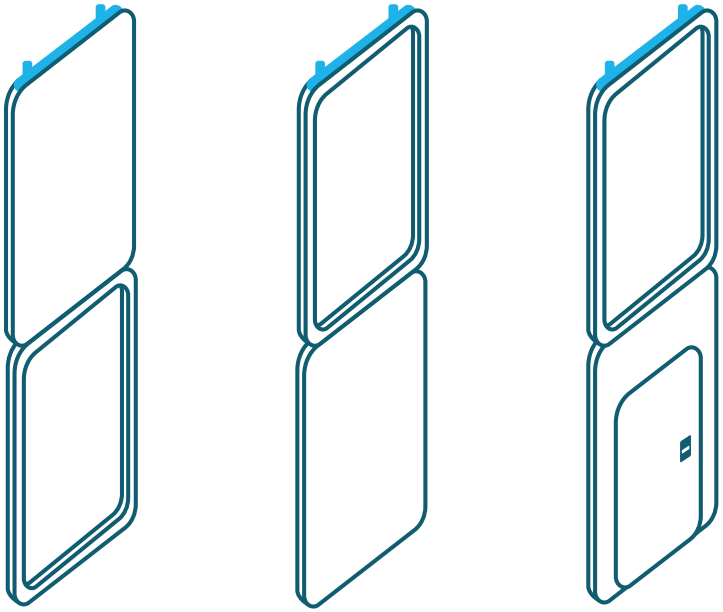

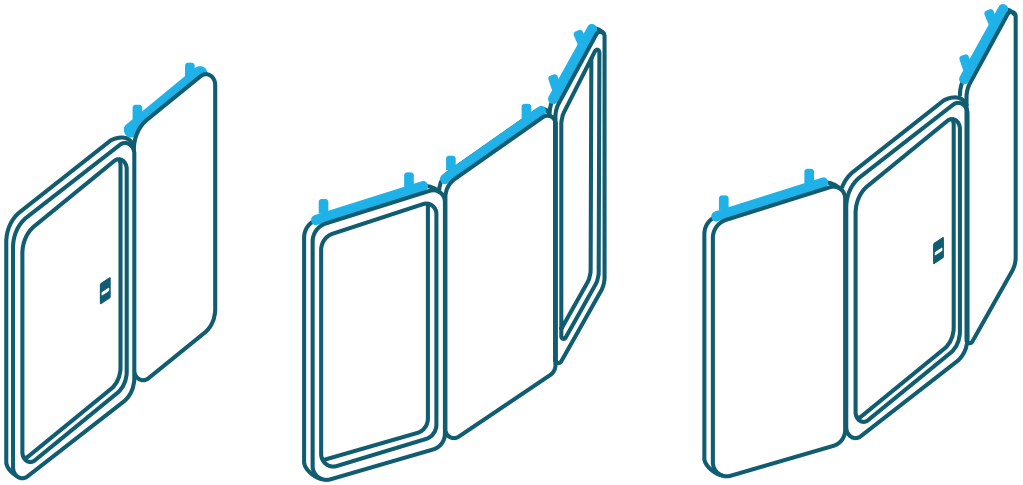

SUSPENSIONS

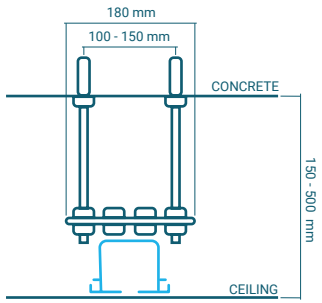

CONCRETE

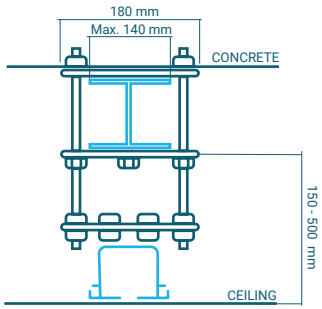

STEEL BEAM WITH 3 PLATES

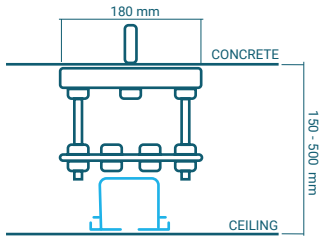

BENT PLATE

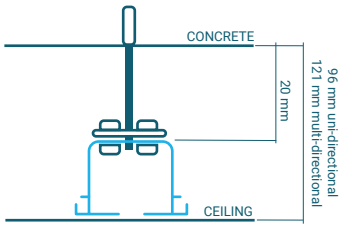

DIRECT

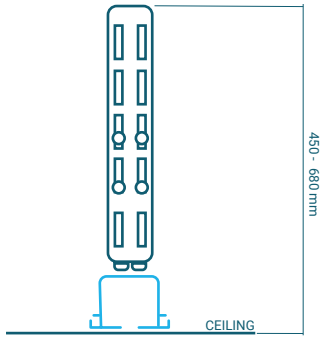

LONGITUDINAL

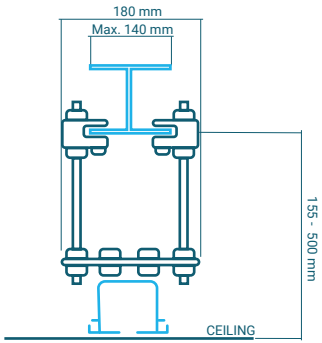

STEEL BEAM WITH CLAMPS

CEILING TRACK

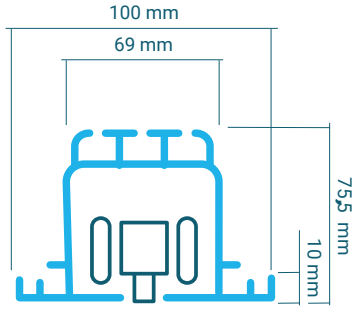

TRACK TYPE UD

Uni–Directional

Aluminium track profiles extruded from architectural grade 6063-T6 alloy.
Load bearing capacity: 358Kg per panel.

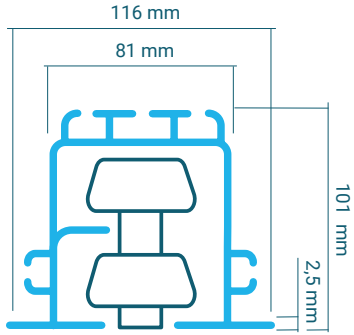

TRACK TYPE MDS

Standard
Multi–Directional

Aluminium track profiles extruded from architectural grade 6063-T6 alloy.
Load bearing capacity: 453Kg per panel.

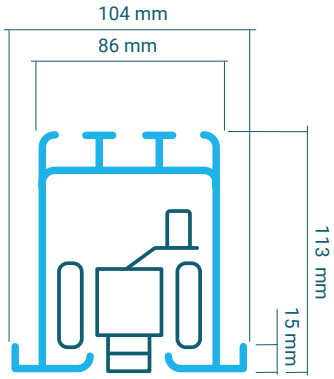

TRACK TYPE MDH

Heavy Duty
Multi–Directional

Aluminium track profiles extruded from architectural grade 6063-T6 alloy.
Load bearing capacity: 850Kg per panel.

FULL AUTO

Our fully automatic i-core system, allows the user to position the wall automatically and safely with a touch pad. Each panel is driven electrically and autonomously along the track.

AUTOMATIC DIVISION OF SPACES

STACKING SYSTEMS

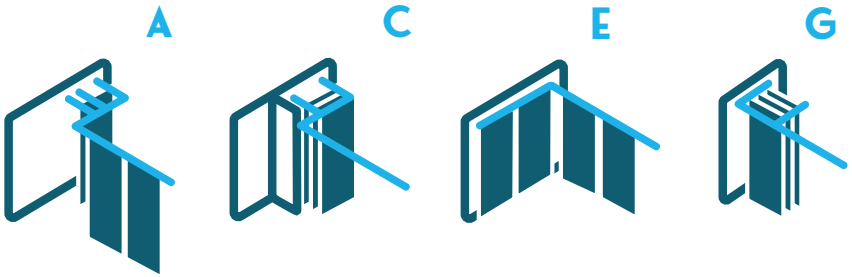

AUTONOMY

Once programmed, each panel moves autonomously to its pre-set location. In the event of a power outage, the partition can still be operated using the back-up battery.

ELECTRICAL SYSTEM

Designed and manufactured by PCTS, this device contains switches and dials for controlling the wall's electrical system. The wall system is designed for smooth operation and precision control, allowing you to seamlessly expand or divide any space with the touch of a button.

UNIVERSITY OF BIRMINGHAM, UNITED KINGDOM - AQUA - FULL AUTO

FULL-AUTO TRACK & STACKING SYSTEM

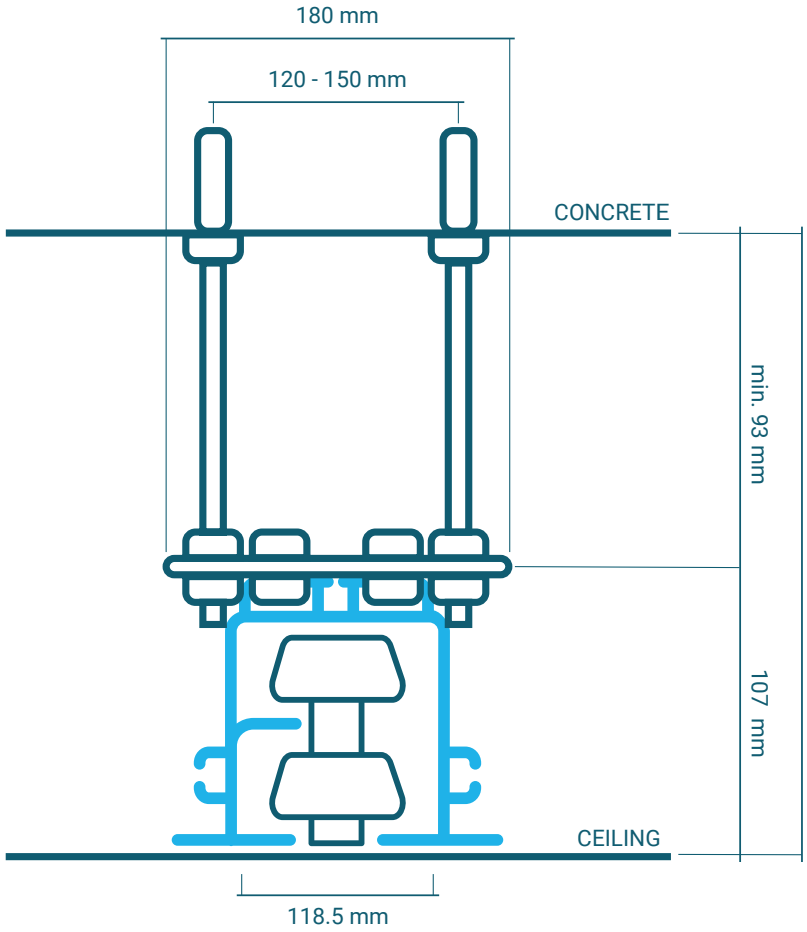

Heavy duty and multi-directional track profiles designed by PCTS and extruded from architectural grade 6063-T6 alloy. Load bearing capacity: 850 kg per panel. A space-saving and dividing panel system, it allows to neatly organize any space by a programmable control outlet, requiring very little human interference. The system allows remote parking in multiple layouts and without the need for floor tracks.

AMAZON, SPAIN - ALMA - FULL AUTO

TECHNICAL DATA TABLE

		FULL AUTO			
		ALMA		AQUA	
Dimensions	Thickness in mm	116 or 122			
	Width in mm	840 - 1300			
	Height in mm (Max.)	6000*			
Technical Features	Soundproofing to ISO 10140-2:2010	Rw (dB) **	Density (kg/m2)	Rw (dB) **	Density (kg/m2)
		42	39	44	39
		45	40	49	48
		47	45		
		50	50		
		54	55		
		57	58		
Finishes	Lacquering	●		●	
	HPL	●			
	MFC	●			
	MDF	●			
	Glass			●	
	Special Finishes	●		●	
Electrically Controlled Blinds				●	
Switchable Glass				●	
Frosted Glass				●	

*For heights over 3500 mm a floor guide is required.
** ISO 10140-2:2010, there's a need to have a segmented panel witha minimum height of 460 mm.

AVAILABLE IN ALMA & AQUA

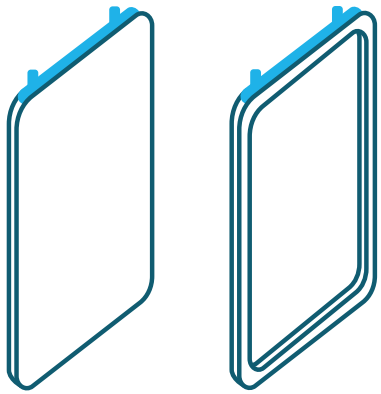

PCTS HEADQUARTERS, PORTUGAL - ALMA & AQUA MIX - FULL AUTO

WITH JUST
ONE CLICK

WAVE

SOUND INSULATION

MANUAL

SEVERAL FINISHES

GLASS

FLOOR SUPPORTED TOP HUNG OPERABLE WALL

INFOSYS, UNITED KINGDOM - WAVE

FLOREAT INVESTMENTS, UNITED KINGDOM - WAVE

ACCENTURE, PORTUGAL - WAVE

BIBLIOTHÈQUE, FRANCE - WAVE

ACCENTURE, PORTUGAL - WAVE

PCTS HEADQUARTERS, PORTUGAL - WAVE

PRIMARK, SPAIN - WAVE

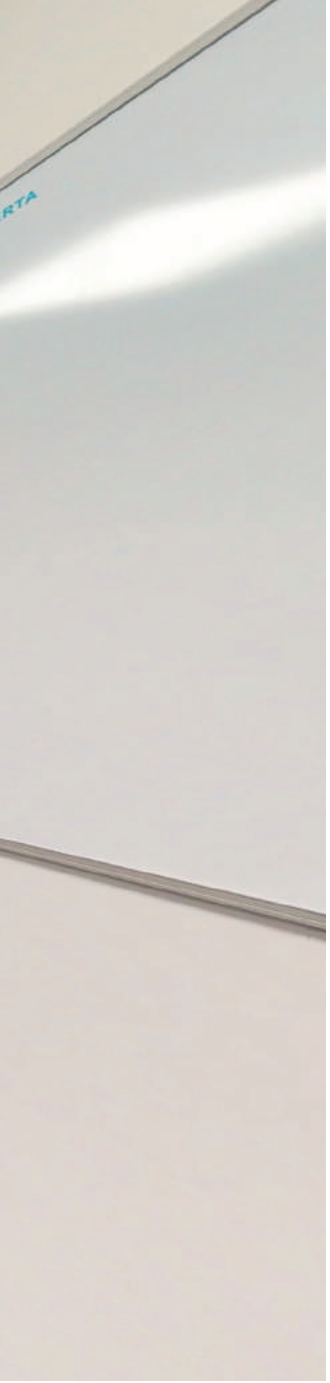

DESSO, UNITED KINGDOM - WAVE

FLOOR SUPPORTED

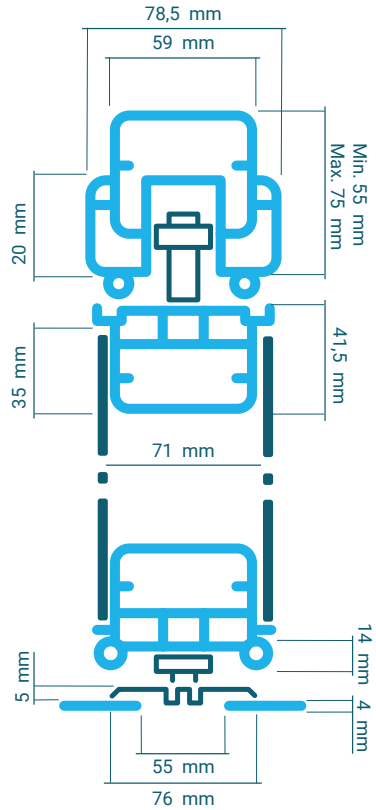

CENTRE FOLDING

SIDE STACKING

Continuously hinged wall with it's weight supported on the floor track.

TOP HUNG

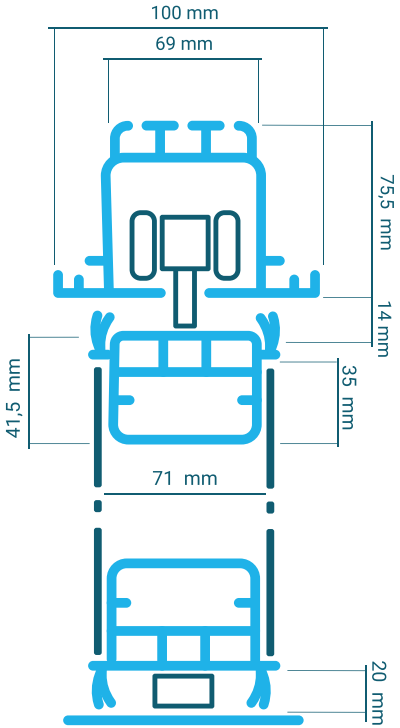

F

Suspended continuously hinged wall with no floor track.

OPERABLE WALL

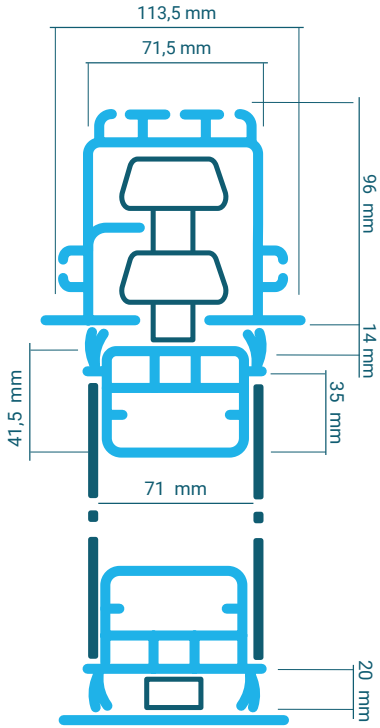

A **C** **E**

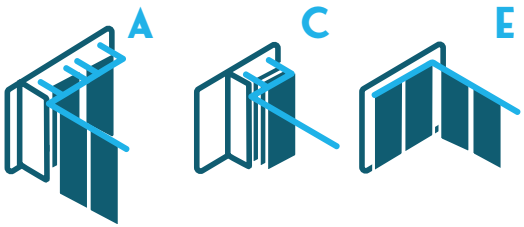

Suspended independent element wall with no floor track.

SUSPENSIONS

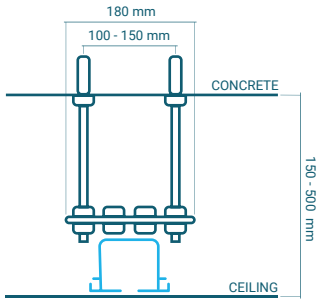

CONCRETE

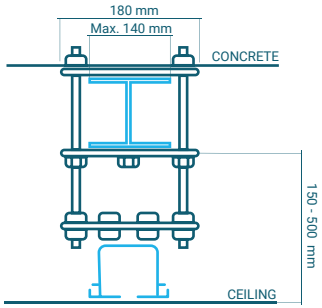

STEEL BEAM WITH 3 PLATES

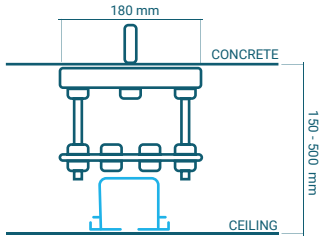

BENT PLATE

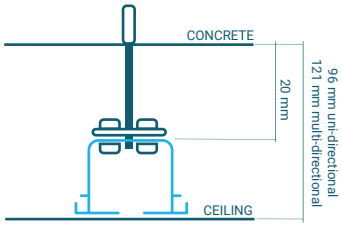

DIRECT

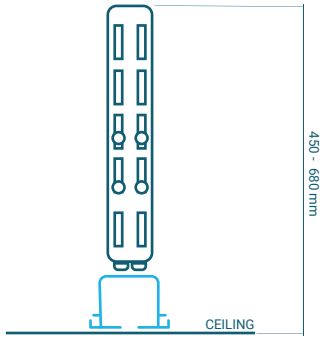

LONGITUDINAL

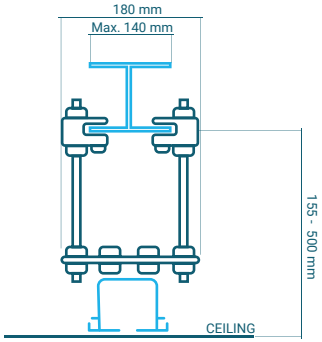

STEEL BEAM WITH CLAMPS

FINISHES

MFC

WHITE - B3822

HPL

WRITABLE WHITE BRIGHT

Glass

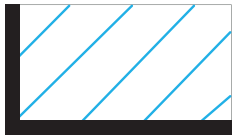

JET BLACK - RAL 9005

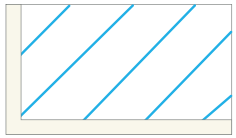

PURE WHITE - RAL 9010

Lacquering

RAL 9010 - PURE WHITE
Textured

RAL 9005 - JET BLACK
Textured

Special Lacquering

NATURAL NEBRASKA OAK

NATURAL DIJON WALNUT

Note: Other panel finishes and, profiles and glass painting upon request.

TECHNICAL DATA TABLE

		FLOOR SUPPORTED		TOP HUNG		OPERABLE -WALL	
Dimensions	Thickness in mm	71		71		71	
	Width in mm	500 - 1050		450 - 1050		450 - 1200	
	Height in mm (Max.)	4000		4000		4000	
Construction	Aluminium Profiles	●		●		●	
	Positive & Negative Aluminium Profiles						
Operation	Manual	●		●		●	
	Semi Automatic						
	Full Automatic						
Floor Track		●					
Technical Features	Soundproofing to ISO 10140-2:2010	Rw (dB)	Density (kg/m2)	Rw (dB)	Density (kg/m2)	Rw (dB)	Density (kg/m2)
		42-43	31-28	42-43	31-28	42-43	31-28
Door Handles	Enclosed Handle	●		●		●	
	Pull Handle						
	Extra Handle	●		●		●	
Finishes	Lacquering	●		●		●	
	HPL	●		●		●	
	MFC	●		●		●	
	MDF						
	Glass	●		●		●	
	Special Finishes	●		●		●	
Electrically Controlled Blinds		●		●		●	
Switchable Glass		●		●		●	
Frosted Glass		●		●		●	

ONE WALL SEVERAL SPACES

VISTA

SOUND INSULATION

MANUAL

THIN

GLASS

FLOOR GUIDED
OPERABLE WALL
PIVOTING WALL
SLIDING DOOR

PCTS HEADQUARTERS, PORTUGAL - VISTA

EDMUND HOUSE, UNITED KINGDOM - VISTA

OFFICE SOLUTIONS, PORTUGAL - VISTA

RESIDENTIAL SOLUTION, PORTUGAL - VISTA

OFFICE SOLUTION, PORTUGAL - VISTA

FLOOR GUIDED

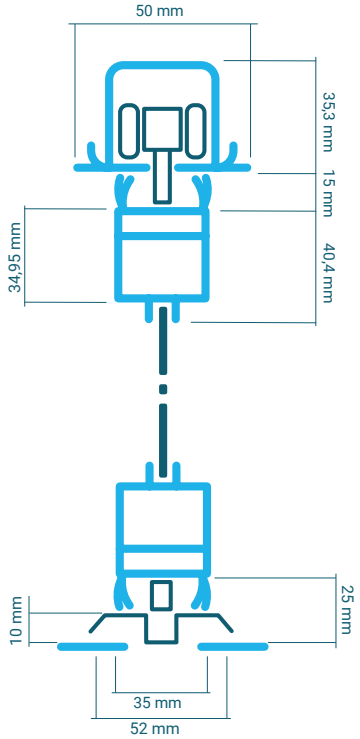

CENTRE FOLDING

SIDE STACKING

Continuous Wall, interconnected by hidden hinges, with it's weight suspended and guided by the floor track.

OPERABLE WALL

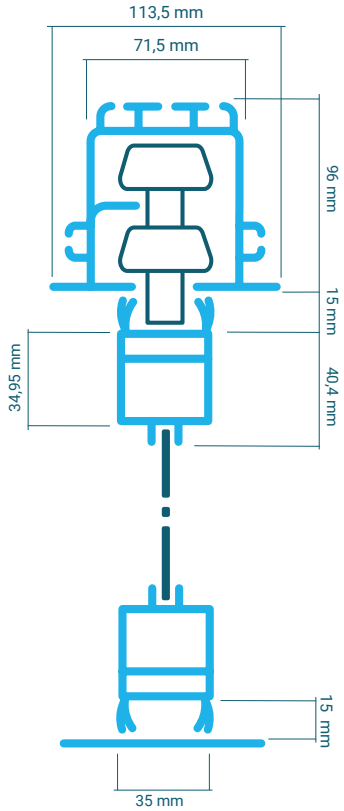

A

C

Suspended independent twin suspension, without floor track. Manual floor lock/latch system.

PIVOTING WALL

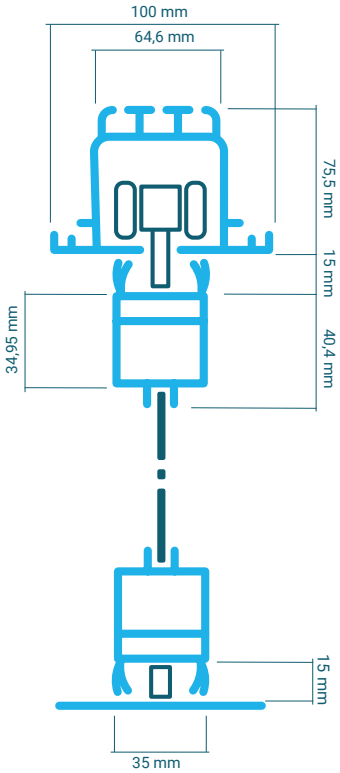

F

Single suspension independent panels, without floor tracks. Manual floor lock/latch system.

SLIDING DOOR

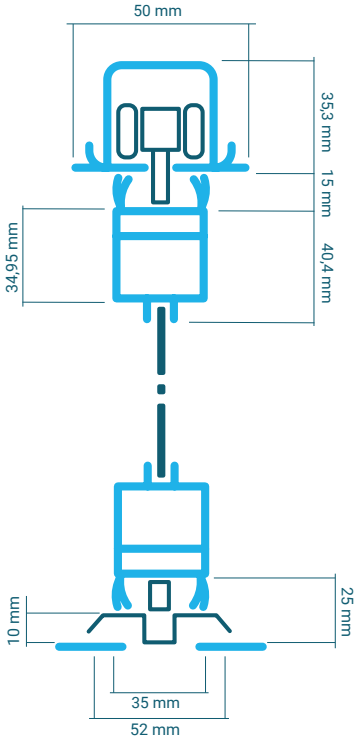

Sliding door with light and thin structure. Great solution for small spaces.

SUSPENSIONS

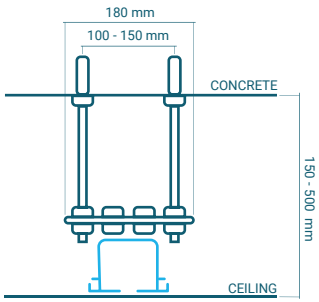

CONCRETE

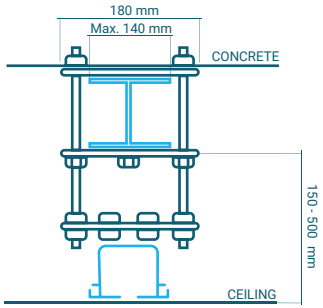

STEEL BEAM WITH 3 PLATES

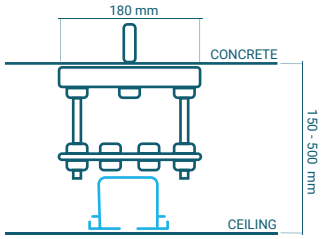

BENT PLATE

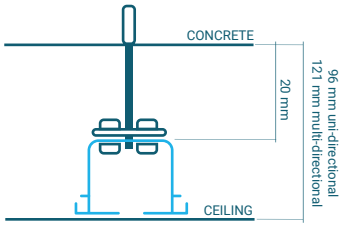

DIRECT

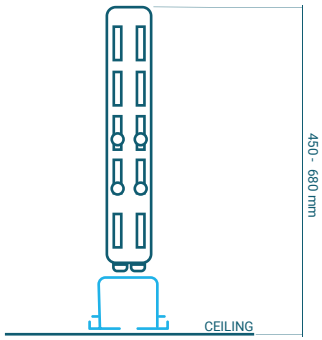

LONGITUDINAL

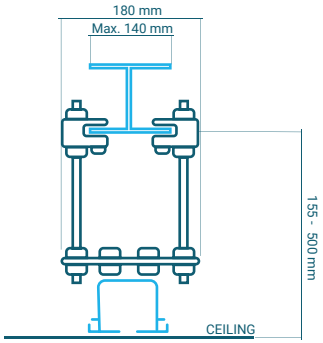

STEEL BEAM WITH CLAMPS

FINISHES

Lacquering

RAL 9005 - JET BLACK
Textured

Special Lacquering

NATURAL NEBRASKA OAK

NATURAL DIJON WALNUT

Glass

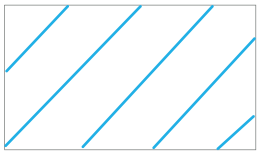

8 or 10 mm

Note: Other panel finishes and, profiles and glass painting upon request.

TECHNICAL DATA TABLE

		FLOOR GUIDED		OPERABLE WALL		SLIDING DOOR		PIVOTING WALL	
Dimensions	Thickness in mm	35		35		35		35	
	Width in mm	500 - 900		500 - 900		500 - 900		500 - 900	
	Height in mm (Max.)	3000		3000		3000		3000	
Construction	Aluminium Profiles	●		●		●		●	
	Positive & Negative Aluminium Profiles								
Operation	Manual	●		●		●		●	
	Semi Automatic								
	Full Automatic								
Floor Track		●							
Technical Features	Soundproofing to ISO 10140-2:2010	Rw (dB)	Density (kg/m2) 8mm	Rw (dB)	Density (kg/m2) 8mm	Rw (dB)	Density (kg/m2) 8mm	Rw (dB)	Density (kg/m2) 8mm
		35	25	35	25	35	25	35	25
Door Handles	Enclosed Handle	●		●		●		●	
	Pull Handle	●		●		●		●	
	Extra Handle	●		●		●		●	
Finishes	Lacquering	●		●		●		●	
	HPL								
	MFC								
	MDF								
	Glass	8 or 10 mm		8 or 10 mm		8 or 10 mm		8 or 10 mm	
	Special Finishes	●		●		●		●	
Electrically Controlled Blinds									
Switchable Glass									
Frosted Glass		●		●		●		●	

CREATING SPACE WITHIN SPACE

		ALMA																		AQUA			
		STANDARD PANEL			FIXED TELESCOPIC JAMB			TELESCOPIC			SINGLE INSET PASSDOOR			DOUBLE INSET PASSDOOR			FULL-HEIGHT PASSDOOR			GLAZED PANEL		TELESCOPIC	
Dimensions	Thickness in mm	116	122	134	116	122	134	116	122	134	116	122	134	116	122	134	116	122	134	115	119	115	119
	Width in mm	800 - 1300			> 200			800 - 1300			1200 / 1250 / 1300			2302			1050			800 - 1300		800 - 1300	
	Height in mm (Max.)	11000			11000			11000			11000			11000			11000			4500 *		4500 *	
Construction	Aluminium Profiles																						
	Positive & Negative Aluminium Profiles	●			●			●			●			●			●			●		●	
Operation	Manual	●			●			●			●			●			●						
	Semi Automatic	●			●			●			●			●			●			●		●	
	Full Automatic	●			●			●			●			●			●			●		●	
Floor Track																							
Technical Features	Soundproofing to ISO 10140-2:2010	Rw (dB)	Density (kg/m2)		Rw (dB)	Density (kg/m2)		Rw (dB)	Density (kg/m2)		Rw (dB)	Density (kg/m2)		Rw (dB)	Density (kg/m2)		Rw (dB)	Density (kg/m2)		Rw (dB)	Density (kg/m2)	Rw (dB)	Density (kg/m2)
		42	39		42	39		42	39		42	39		42	39		42	39		44	39	44	39
		45	40		45	40		45	40		45	40		45	40		45	40		49	48	49	48
		47	45		47	45		47	45		46	45		47	45		47	45					
		50	50		50	50		50	50					50	50		50	50					
		54	55		54	55		54	55					54	55		54	55					
		57	58		57	58		57	58					57	58		57	58					
Door Handles	Enclosed Handle										●			●			●						
	Pull Handle																						
	Extra Handle										●			●			●						
Finishes	Lacquering	●			●			●			●			●			●			●		●	
	HPL	●			●			●			●			●			●						
	MFC	●			●			●			●			●			●						
	MDF	●			●			●			●			●			●						
	Glass																			●		●	
	Special Finishes	●			●			●			●			●			●			●		●	
Electrically Controlled Blinds																				●		●	
Switchable Glass																				●		●	
Frosted Glass																				●		●	

*For heights above 3300mm, panels have to be segmented.

SEE OUR WALLS' FEATURES

AQUA								WAVE						VISTA							
MIX		SINGLE INSET PASSDOOR		DOUBLE INSET PASSDOOR		FULL-HEIGHT PASSDOOR		FLOOR SUPPORTED		TOP HUNG		OPERABLE -WALL		FLOOR GUIDED		OPERABLE WALL		SLIDING DOOR		PIVOTING WALL	
115	119	115	119	115	119	115	119	71		71		71		35		35		35		35	
800 - 1300		1200 / 1250 / 1300		2302		1050		500 - 1050		450 - 1050		450 - 1200		500 - 900		500 - 900		500 - 900		500 - 900	
6000 *		4500		4500		3300		4000		4000		4000		3000		3000		3000		3000	
								●		●		●		●		●		●		●	
●		●		●		●															
								●		●		●		●		●		●		●	
●		●		●		●															
●		●		●		●															
								●						●							
Rw (dB)	Density (kg/m2)	Rw (dB)	Density (kg/m2)	Rw (dB)	Density (kg/m2)	Rw (dB)	Density (kg/m2)	Rw (dB)	Density (kg/m2)	Rw (dB)	Density (kg/m2)	Rw (dB)	Density (kg/m2)	Rw (dB)	Density (kg/m2) 8mm	Rw (dB)	Density (kg/m2) 8mm	Rw (dB)	Density (kg/m2) 8mm	Rw (dB)	Density (kg/m2) 8mm
44	39	44	39	44	39	44	39	42-43	31-28	42-43	31-28	42-43	31-28	35	25	35	25	35	25	35	25
49	48	49	48	49	48	49	48														
		●		●		●		●		●		●		●		●		●		●	
														●		●		●		●	
		●		●		●		●		●		●		●		●		●		●	
●		●		●		●		●		●		●		●		●		●		●	
								●		●		●									
								●		●		●									
●		●		●		●		●		●		●		8 or 10 mm		8 or 10 mm		8 or 10 mm		8 or 10 mm	
●		●		●		●		●		●		●		●		●		●		●	
●		●		●		●		●		●		●									
●		●		●		●		●		●		●									
●		●		●		●		●		●		●		●		●		●		●	

PCTS

INTELLIGENT SPACES

WWW.PCTS.PT

GERAL@PCTS.PT

R. DE MOÇAMBIQUE, N 29, ORDEM,
2430-379 MARINHA GRANDE, PORTUGAL